TECHNICAL EXCELLENCE. SINCE 1929.

BALANCERS

ROTOLIFT

ART. 6628

type
Balancer with safety system

Cable type
INOX Steel

Capacity (kg)
11 ÷ 18

mm 170x125x70

TECHNICAL DATA

Article	Description	Fall prevention system	Cable diameter (mm)	Cable Type	Capacity (kg)	weight (gr)
6628	Balancer with safety system	yes	6	INOX Steel	11 ÷ 18	6500

Please note: The images are for illustrative and explanatory purposes only

OVERALL DIMENSIONS

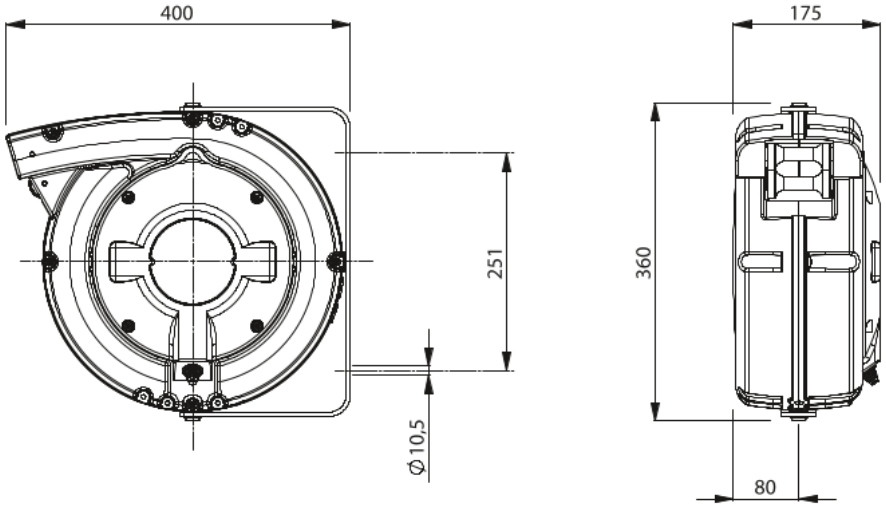

25 kg on 3 mm sheet metal

PR series winder equipped with cable stop device, designed to rewind a steel cable to which objects can be suspended which must be lowered on the work surface only for the period of use.
After use, unlatch the stopping device; these objects can be move higher than the operating area.
Steel cable ø 3 mm with transparent nylon cover ø 6 mm.

The capacity of these cable reels is preset and therefore cannot be adjusted by the customer.

The ROTOLIFT finds its typical application in workshops where there is an exhaust gas suction system made by means of special rubber reels suspended from above.
In these cases, the ROTOLIFT keeps the suction tube suspended above the work area when it is not in use.