TECHNICAL EXCELLENCE. SINCE 1929.

BALANCERS

Series 63X stainless steel wire rope

ART. 637

type
Balancer with safety system

Cable type
INOX Steel

Capacity (kg)
10 ÷ 14

mm 245x200x110

TECHNICAL DATA

Article	Description	Fall prevention system	Cable diameter (mm)	Cable Type	Capacity (kg)	weight (gr)
637	Balancer with safety system	yes	2.5	INOX Steel	10 ÷ 14	3500

Please note: The images are for illustrative and explanatory purposes only

OVERALL DIMENSIONS

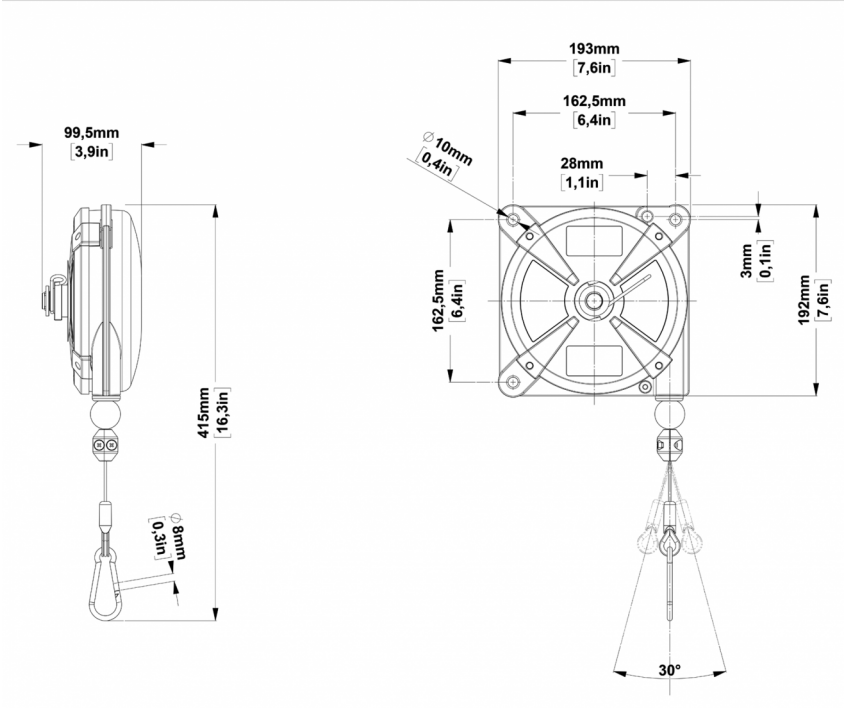

25 kg on 3 mm sheet metal

- Die-cast aluminum structure.
- Continuous load regulation from maximum to minimum value.
- Rope travel easily adjustable to adapt to every need.
- Four suspension points.
- Three anchor points.

The support cable can be in stainless steel or in HT polyethylene textile fiber.
BALANCERS WITH STAINLESS STEEL SUPPORT CABLE
For operators who prefer metal cables, we offer the balancer with stainless steel cable.

OPTIONAL ACCESSORIES AND SPARE PARTS

ART. 982

Spiral hose (PA12) 8 x 10 for balancers.

This useful accessory can be applied on balancers art. 620, 621, 622, 630, 631 and 632. It is supplied with assembly instructions, all accessories and 1 m of additional hose for connection to the compressed air network and to the tool.

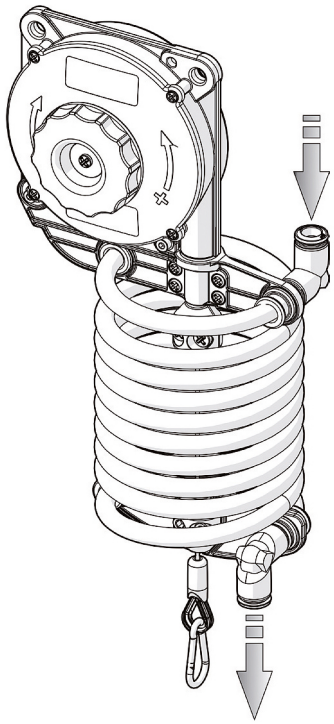

Please note: The images are for illustrative and explanatory purposes only