TECHNICAL EXCELLENCE. SINCE 1929.

BALANCERS

Series 62X textile rope

ART. 626

type
Balancer with safety system

Cable type
HT polyethylene fibre

Capacity (kg)
8 ÷ 10

ISO EN 12100 | 2006/42/CE | CE

mm 245x200x110

TECHNICAL DATA

Article	Description	Fall prevention system	Cable diameter (mm)	Cable Type	Capacity (kg)	weight (gr)
626	Balancer with safety system	yes	2.5	HT polyethylene fibre	8 ÷ 10	3200

Please note: The images are for illustrative and explanatory purposes only

OVERALL DIMENSIONS

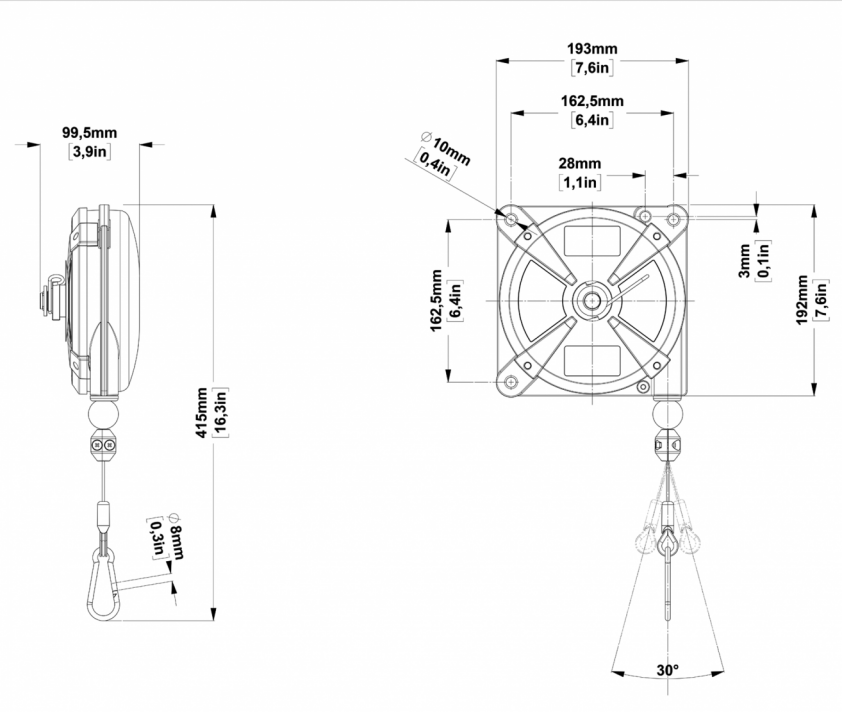

25 kg on 3 mm sheet metal

Balancers to support the weight of hand tools, screwdrivers, etc. An essential aid in repetitive work, assembly, mass production, packaging, etc. The balancers are made of top quality materials and can withstand particularly heavy work cycles.

- Die-cast aluminum structure.
- Continuous load regulation from maximum to minimum value.
- Rope travel easily adjustable to adapt to every need.
- Four suspension points to ensure maximum safety as per regulations.
- Three anchoring points to ensure maximum flexibility

Please note: The images are for illustrative and explanatory purposes only

OPTIONAL ACCESSORIES AND SPARE PARTS

ART. 982

Spiral hose (PA12) 8 x 10 for balancers.

This useful accessory can be applied on balancers art. 620, 621, 622, 630, 631 and 632. It is supplied with assembly instructions, all accessories and 1 m of additional hose for connection to the compressed air network and to the tool.

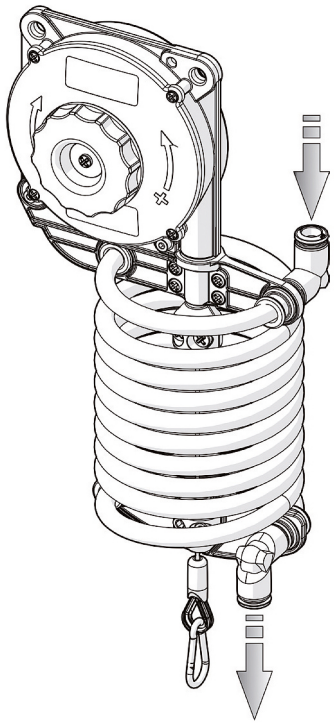

Please note: The images are for illustrative and explanatory purposes only